Hub 2

User Manual

Version 1.4

Contents

1.	**Product information**	**3**
1.1.	Safety information	3
1.2.	Box contents	3
1.3.	Overview	4
1.4.	Ports and connectors	4
1.5.	Battery system compatibility	4
2.	**Installation**	**5**
2.1.	Required items	5
2.2.	Installation steps	6
2.2.1.	Mount to wall	6
2.2.2.	Connect RS485 to inverter	6
2.2.3.	Install and connect to meter	7
2.2.4.	Internet connection	8
2.2.4.1.	Connect with Ethernet	8
2.2.4.2.	Connect with Wi-Fi	8
2.2.5.	Connect power	9
2.2.6.	Installer commissioning	9
2.2.7.	Homeowner registration	9
3.	**Care and maintenance**	**9**
4.	**Troubleshooting**	**10**
5.	**Appendix**	**11**
5.1.	Network services	11
5.2.	Specification	11

levelline

1. Product information

Welcome to your Hub 2! Please read this manual carefully as it contains important information on the correct installation and use of your Hub 2. Levelise takes no liability or responsibility for damage or injuries that may be caused by using Hub 2 in a way that is not intended to be used.

1.1. Safety information

- Do not use Hub 2 if damaged, including if the attached cables are damaged.
- Hub 2 is not a toy, children should not install or operate it.
- Only install and use Hub 2 indoors.
- Do not install or use Hub 2 in damp or excessively dusty locations.
- Do not install or use Hub 2 in direct sunlight.
- Only install and use Hub 2 in a location where the temperature is between -5°C and 60°C.
- Do not install or use Hub 2 in a toxic, potentially explosive, or potentially flammable atmosphere.
- Only install Hub 2 in a location with 100 mm clearance in all directions.
- Do not use spare cores in the RS485 cables connecting Hub 2 to the inverter and Hub 2 Meter for any other purpose.
- When installed, do not obstruct access to the mains port power at any time.

1.2. Box contents

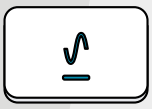
Hub 2

Wall bracket

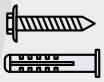
Fixing kit

Registration leaflet

Quick install guide

Hub 2-Meter RS485 cable

Hub 2-Inverter RS485 cable

2x RJ11 connectors

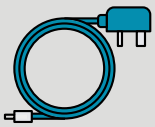
Power cable

1.3. Overview

Hub 2 connects to a supported battery system to optimise its use, enabling additional savings and generating revenue. It does this by predicting future energy demand and solar PV generation, scheduling battery dispatch to advantageous times. Advanced metrology in Hub 2 allows entry to flexibility markets which provide a further source of earnings. Battery system performance can be viewed in the Levelise app.

Hub 2 connects to the battery inverter using RS485. To support the full range of Levelise services a Hub 2 meter must be installed in series with the battery inverter and connected to Hub 2 via RS485. Hub 2 requires an internet connection at all times.

1.4. Ports and connectors

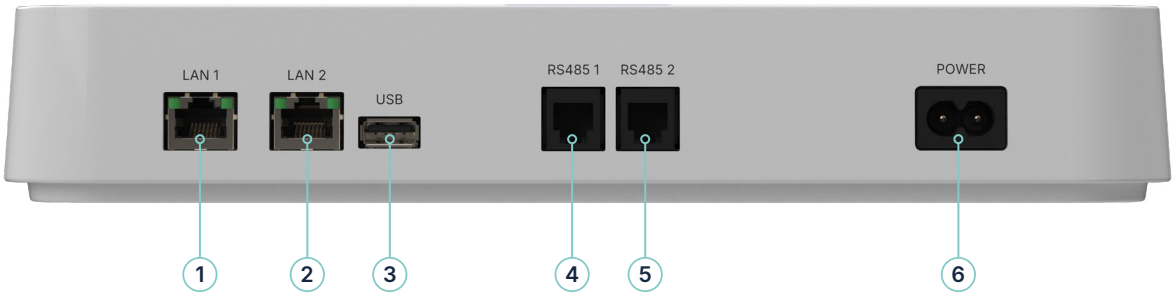

Ports:

1 **LAN 1:** Internet / broadband router connection.

2 **LAN 2:** For sharing Hub 2 internet connection with battery inverter.

3 **USB:** Reserved for future use.

4 **RS485 1:** RS485 data to battery inverter.

5 **RS485 2:** RS485 data to Hub 2 meter.

6 **POWER:** Mains power.

1.5. Battery system compatibility

The full list of compatible battery systems can be found online at support.levelise.com.

2. Installation

Before installing Hub 2, install a compatible battery inverter according to the battery inverter manufacturer's instructions. Always use two sensors, e.g. a CT or a meter, with compatible AC-coupled battery systems – one for grid import/export and one for solar generation.

If possible, installation of Hub 2 should use the provided RS485 cables.

Below is an overview of a Hub 2 installation:

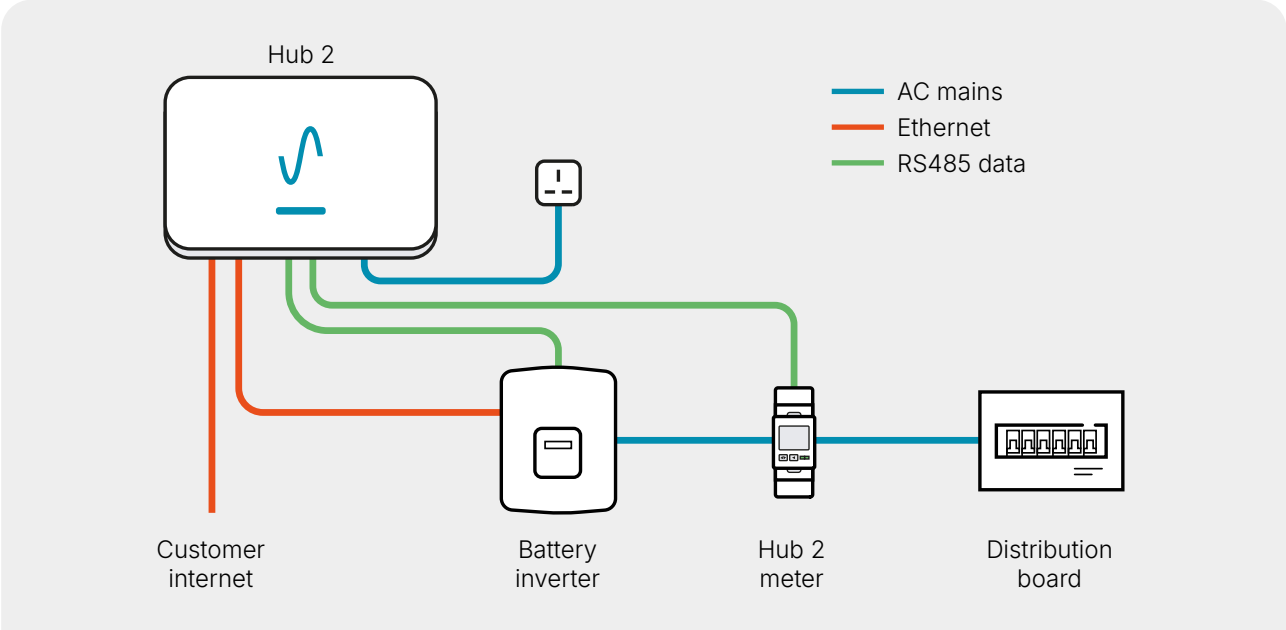

IMPORTANT:
Hub 2 must be installed by a qualified electrician

2.1. Required items

Pozi #2 screwdriver

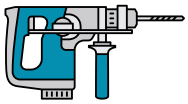
Drill & 6 mm drill bit

Spirit level

Smartphone

Eastron SDM230-NMI-2 (Hub 2 Meter)

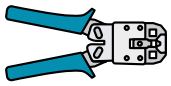
RJ45/11 crimping tool

Cat5 cable

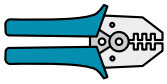
Wire cutters and strippers

2.2. Installation steps

IMPORTANT: Hub 2 should not be installed near significant sources of electromagnetic radiation that have the potential to interfere with data and wireless communications.

2.2.1. Mount to wall

1. Mount the wall bracket using the appropriate fixings, with the arrow in wall bracket pointing up.
2. Fit Hub 2 to the wall bracket: Tilt Hub 2 slightly face down and slide upwards onto the wall bracket's lower legs. With the lower legs of the wall bracket slotted into the casing, push the top of the unit towards the wall and slide down so that Hub 2 latches onto the wall bracket's upper legs as well.

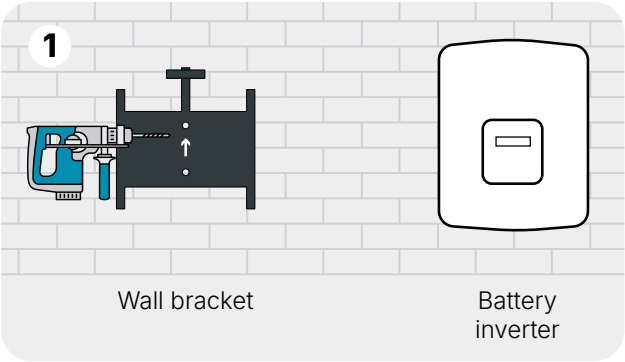

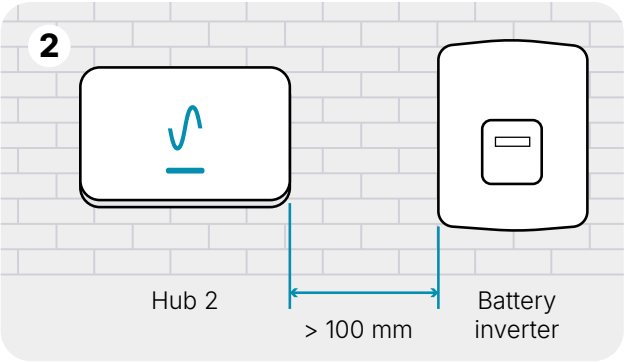

2.2.2. Connect RS485 to inverter

Plug the 'HUB 2' connector on the supplied inverter RS485 cable into the Hub 2 port labelled 'RS485 1'.

For compatible SolaX products:

- Plug the 'INVERTER' connector on the supplied inverter RS485 cable into the battery inverter port labelled 'COM/LCD'.

For other compatible inverter brands:

- Modify the supplied inverter RS485 cable and Modbus settings to match the inverter RS485 connection in the table below and connect to the battery inverter's RS485 port:

BRAND	CONNECTOR	BLUE WIRE (RS485 A)	BLUE & WHITE WIRE (RS485 B)	ADDRESS	BAUD RATE
Afore	RJ45	Pin 3	Pin 6	4	115,200
Alpha ESS	RJ45	Pin 5	Pin 4	85	115,200
Fox ESS	Proprietary	Pin 4	Pin 3	247	19,200
SolaX	RJ45	Pin 4	Pin 5	4	19,200
Hinen	RJ45	Pin 6	Pin 3	1	115,200
Hub 2	RJ11	Pin 4	Pin 3	N/A	N/A

For detailed guides by manufacturer visit support.levelise.com.

If an RS485 cable other than that provided with Hub 2 is used, this should be less than 30 m long.

IMPORTANT:

Do not use spare cores in the RS485 cable for any other purpose.

Check the inverter is set to the correct RS485 address and baud rate.

For technical support, including written and video guides, visit support.levelise.com.

2.2.3. Install and connect to meter

Install a Hub 2 meter in series with the battery inverter so terminal 1 connects to the supply from the distribution board and terminal 2 connects to the battery inverter. The meter's power measurement should be positive when the battery charges and negative when it discharges.

Using the supplied RS485 cable plug the end labelled 'HUB 2' into the available RS485 port on the underside of Hub 2.

Connect the other end of the cable labelled 'Meter' to the meter such that the orange wire is in terminal 9 and the orange and white wire is in terminal 10.

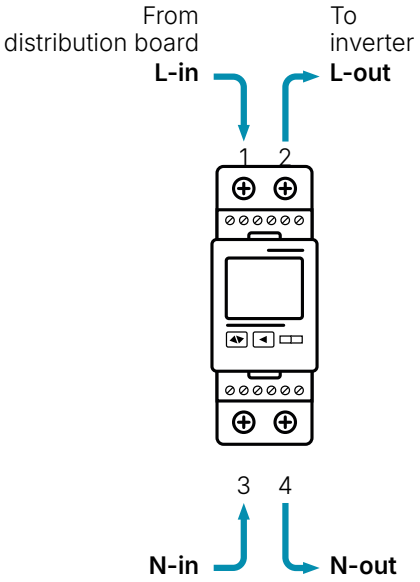

	GREEN WIRE (GROUND)	ORANGE WIRE (RS485 B)	ORANGE & WHITE WIRE (RS485 A)
Hub 2 meter	Terminal 8	Terminal 9	Terminal 10
Hub 2 RJ11	Pin 2	Pin 3	Pin 4

IMPORTANT:

Install meter in suitably rated enclosure.

Do not use spare cores in the RS485 cable for any other purpose.

Ensure meter is set to baud rate 19,200 and address 1.

For technical support, including written and video guides, visit support.levelise.com.

2.2.4. Internet connection

Ethernet is the recommended method for providing an internet connection. Hub 2 works best with a stable internet connection and Ethernet provides the best long-term reliability.

2.2.4.1. Connect with Ethernet

Any Ethernet cables used should be less than 100 m long.

To connect Hub 2 to the internet using Ethernet, plug an Ethernet cable into the port labelled 'LAN 1' on Hub 2. Plug the other end of the Ethernet cable into an available port on the back of the broadband router.

Recommended: Hub 2 acts as an Ethernet network switch. This means that when using Ethernet, it is possible to share Hub 2's internet connection with the battery inverter by connecting LAN port to the network port on the inverter with an Ethernet cable.

IMPORTANT:

- Avoid routing Ethernet cables alongside 230 V AC cables.
- For long term reliable connections avoid using powerline adaptors or Wi-Fi extenders.

2.2.4.2. Connect with Wi-Fi

If using a Wi-Fi connection do not install Hub 2 near sources of RF noise.

To use Wi-Fi, follow the in-app instructions during commissioning (see next step).

IMPORTANT:

- The Wi-Fi setup will use Bluetooth to connect to Hub 2. You must be within Bluetooth range of Hub 2 for the connection to succeed – this is likely to be within a few metres of Hub 2.
- The Wi-Fi signal strength at Hub 2 must be sufficiently strong to provide a consistent connection.

2.2.5. Connect power

Using the supplied AC power cable, connect Hub 2 to a mains power socket.

2.2.6. Installer commissioning

1. With the installer's smartphone, scan the QR code on the instruction leaflet or on the side of Hub 2 using the Levelise app.
2. Follow the instructions in the app to complete commissioning.
3. Once the commissioning is complete, pass the leaflet to the homeowner and prepare to handover the system.

Installer's smartphone

2.2.7. Homeowner registration

1. On the homeowner's smartphone, scan the QR code on the introduction leaflet or on the side of Hub 2 using the Levelise app.
2. Follow the instructions in the app to complete registration.

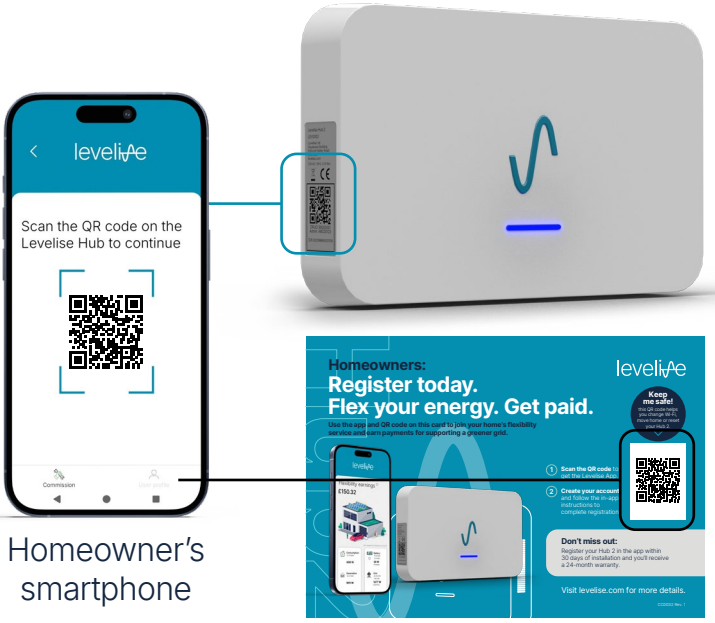

Homeowner's smartphone

3. Care and maintenance

Hub 2 has no user serviceable parts, users must not open Hub 2 or replace any internal parts of the Hub 2.

To clean Hub 2 wipe with a clean, dry cloth. Do not use any abrasive cleaning agents or solvents to clean Hub 2. Do not submerge any part of Hub 2 in liquid.

To remove Hub 2 from the wall bracket, slide the unit upwards until it unlatches from the upper supporting legs of the wall bracket at the top. Lean the unit away from the wall at the top edge, then lower the unit to clear lower supporting legs of the wall bracket.

4. Troubleshooting

For technical support, including written and video guides, visit support.levelise.com or scan this QR code:

Hub 2 does not power on – blue LED on front of Hub 2 is off

- Ensure the power cable is fully inserted into Hub 2.
- Ensure the supply to Hub 2 is on.

Levelise app indicates Hub 2 cannot communicate with battery inverter over RS485

- Check the inverter is powered on.
- Check the continuity of the cables and that the cables match to the pinout in section 2.2.2.
- Check the inverter is set to the correct device ID and baud rate as shown in section 2.2.2.
- Using the Levelise app check Hub 2 is configured to the correct inverter make and model. Power cycle Hub 2 after making any configuration change.

Levelise app indicates Hub 2 cannot communicate with battery meter over RS485

- Check RS485 cable is connected as outlined in section 2.2.3.
- Check RS485 address and baud rate of the meter are set to address 1 and baud rate 19,200.

Levelise app indicates Hub 2 battery meter has an issue

- Check the meter is wired with correct polarity. Terminal 1 should go to the supply and terminal 2 should go to the meter as outlined in section 2.2.3.
- When the battery charges, the meter's power reading will be positive. When the battery discharges the battery inverter power reading will be negative.

Hub 2 not connected to internet when using wired / Ethernet connection

- Check the broadband router is powered on and is providing internet to other devices.
- Check no settings on the customer's router are blocking Hub 2.
- Check the port on the broadband router supports 100 base connection speed.
- Reboot Hub 2.

Hub 2 not connected to internet via Wi-Fi

- Check the broadband router is powered on and is providing internet to other devices.
- Check no settings on the broadband router are blocking Hub 2.
- Confirm the Wi-Fi signal strength is strong at Hub 2's location.
- Double check Wi-Fi credentials are correct on Hub 2.
- Consider using Ethernet connection instead.

5. Appendix

5.1. Network services

During normal operation Hub 2 uses the following network services:

- DHCP
- DNS
- mDNS
- NTP
- HTTPS
- HTTP
- ICMP
- SSH

For correct operation the network Hub 2 is connected to should allow Hub 2 communication of these services.

5.2. Specification

Product name	Hub 2
Model number	LEV0002
Manufacturer	Levelise Limited Hayakawa Building Edmund Halley Road Oxford OX4 4GB
Supply voltage	230 V AC ± 10%, at 50 Hz
Maximum load	0.2 A
Frequency measurement accuracy	±0.001 Hz, at 50 Hz
Data connections	Two RS485 ports One CAN bus port One USB port Two Ethernet ports Wi-Fi Bluetooth
Operating ambient temperature	-5°C to 60°C
Operating relative humidity	0 to 90%, non-condensing
Operating location	Indoor only (IP20)
Operating altitude	Altitude less than 2000 m
Operating environment pollution degree	Pollution degree 2
Dimensions	296 × 191 × 49 mm (without wall mount)
Weight	905 g, approx. (without wall mount)

levelise

www.levelise.com

MADE IN BRITAIN

Registered in England & Wales, No. 10653159 | VAT No. 268 2965 56
Registered office: Synergy House, Woolpit Business Park, Woolpit, Bury St. Edmunds, Suffolk IP30 9UP